MITSUBISHI ELECTRIC
HVAC Advanced Products Division

Mr. SLIM®
Split-ductless A/C and Heat Pumps

SUBMITTAL DATA: PLA-A12AA & PUY-A12NHA

12,000 Btu/h CEILING CASSETTE AIR-CONDITIONING SYSTEM

Job Name: Location: Date:

Purchaser: Engineer:

Submitted to: For ☐ Reference ☐ Approval ☐ Construction

Unit Designation: Schedule No.:

GENERAL FEATURES

- Limited warranty: one year on parts and defects and six years on compressor
- Compact side-discharge outdoor unit
- Zone control
- Wireless remote controller
- Automatic fan speed control
- Quiet operation – both indoor and outdoor units
- Auto restart following a power outage
- Self check function – onboard diagnostics
- Advanced microprocessor control

Rated capacity . . . . . 12,000 Btu/h
Minimum capacity . . . . . 6,000 Btu/h
SEER . . . . . 13.0 Btu/h/W
Total input . . . . . 1260 W
Power supply . . . . . 208 / 230V, 1 Phase, 60 Hz
Breaker size . . . . . 15 A

Voltage
Indoor - Outdoor S1-S2 . . . . . AC 208/230V
Indoor - Outdoor S2-S3 . . . . . DC 24V
Indoor - Remote Controller . . . . . DC

Indoor unit
MCA . . . . . 1 A
Fan motor . . . . . 0.79 F.L.A.
Fan motor output . . . . . 70 W
Airflow (Lo-M1-M2-Hi) . . . . . 390-420-460-490 Dry CFM
350-380-420-450 Wet CFM
Sound level (Lo-M1-M2-Hi) . . . . . 27-28-29-31 dB(A)

DIMENSIONS		UNIT	PANEL
inches	W	33-1/16	37-3/8
	D	33-1/16	37-3/8
	H	10-3/16	1-3/16
mm	W	840	950
	D	840	950
	H	258	30

Weight (unit/panel)
Pounds . . . . . 49 / 11
Kg . . . . . 22 / 5
Field drain pipe size I.D. (inches/mm) . . . . . 1 / 25.4

Wall-mounted remote controller PAR-21MAA
(see data submittal sheet)

Remote Controller:
PAR-21MAA

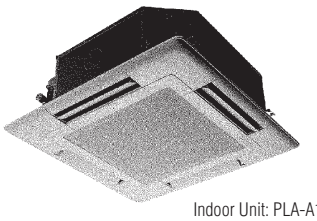
Indoor Unit: PLA-A12AA

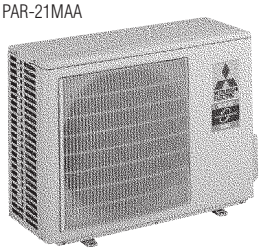
Outdoor Unit: PUY-A12NHA

Outdoor Unit
Compressor . . . . . DC inverter/twin rotary
MCA 13
Fan motor . . . . . 0.35 F.L.A.
Sound level . . . . . 46 dB(A)

DIMENSIONS	INCHES	MM
W	31-1/2	800
D	13 + 7/8	330 + 23
H	23-5/8	600

Weight (lbs/Kg) . . . . . 90 / 41
Refrigerant type R410A
Refrigerant pipe size O.D. (inches/mm)
gas side . . . . . 1/2 / 12.7
liquid side . . . . . 1/4 / 6.35
Max. refrigerant pipe length (ft/m) . . . . . 100 / 30
Max. refrigerant pipe height difference (ft/m) . . . . 100 / 30
Connection method . . . . . flared

NOTES :
*1. Rating conditions (cooling)-indoor : D.B. 80°F, W.B. 67°F
outdoor : D.B. 95°F, W.B. 75°F.

Operating range

		Indoor intake air temp.	Outdoor intake air temp.
Cooling	Maximum	D.B. 95°F, W.B. 71°F	D.B. 115°F
	Minimum	D.B. 67°F, W.B. 57°F	D.B. 0°F *

* With wind baffle installed. If not installed, the minimum temperature will be 23°FDB.

R410A INVERTER

Notes:

DIMENSIONS: PLA-A12AA & PUY-A12NHA

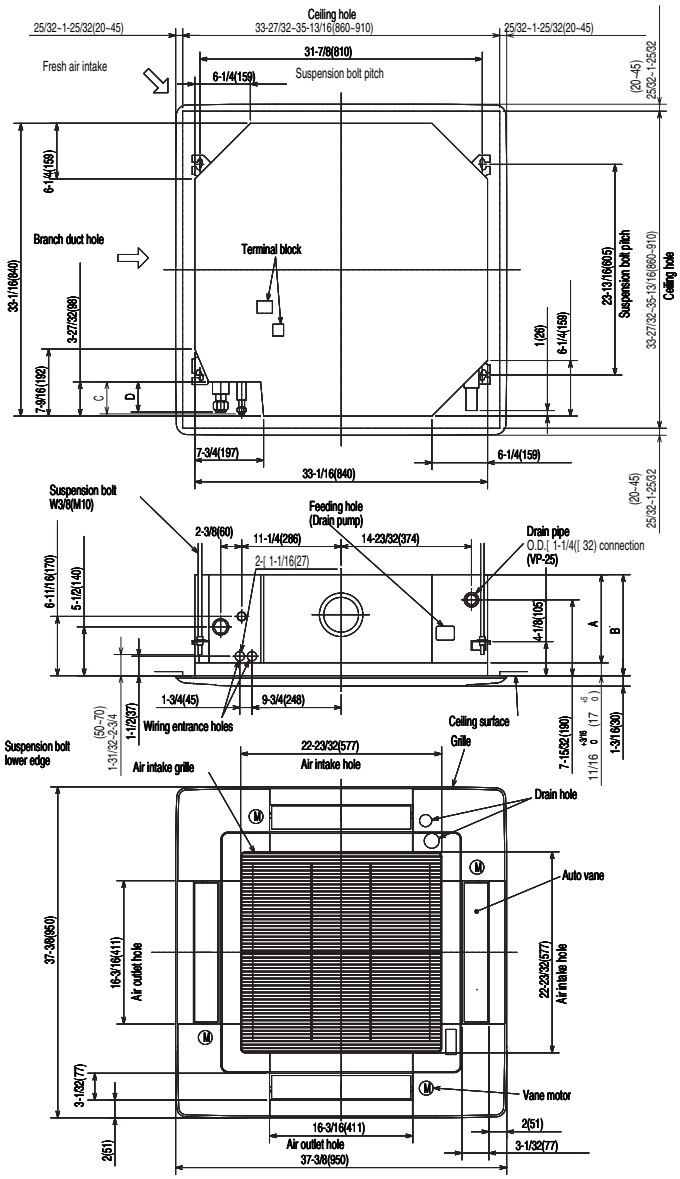

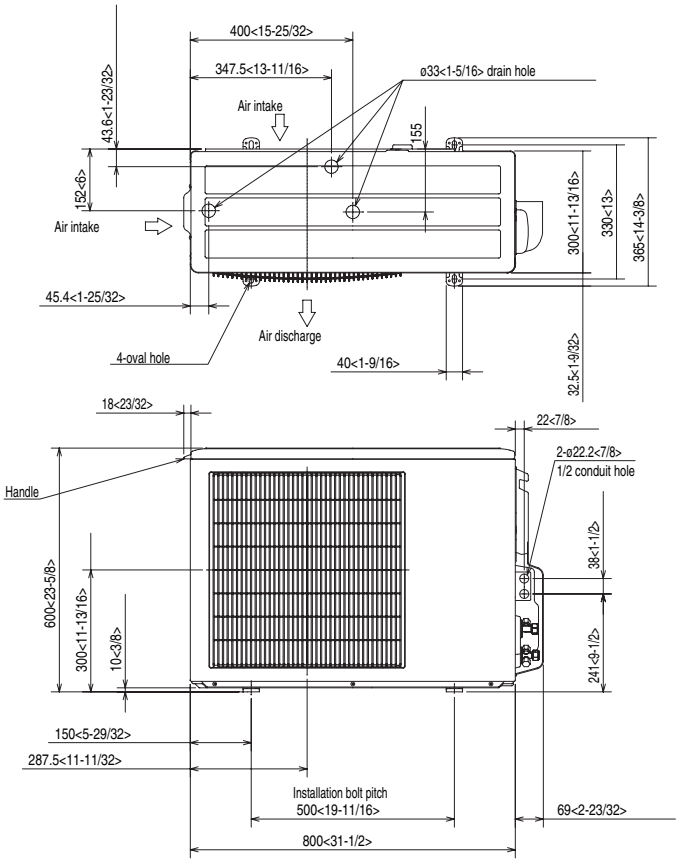

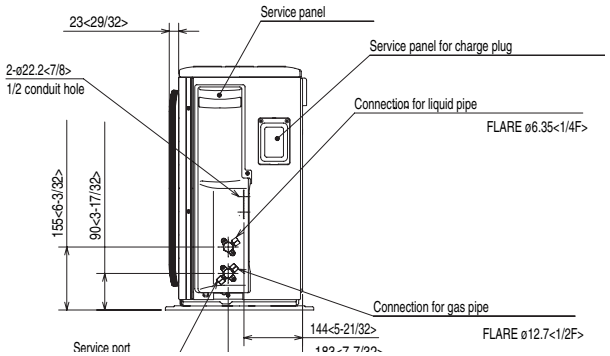

ARI Standard
210/240 UHP

MITSUBISHI ELECTRIC
HVAC Advanced Products Division
Mitsubishi Electric & Electronics USA, Inc.

3400 Lawrenceville Suwanee Rd
Suwanee, GA 30024
Tele: 678-376-2900 • Fax: 800-889-9904
Toll Free: 800-433-4822 (#3)
www.mehvac.com

 © MITSUBISHI ELECTRIC / HVAC 2006